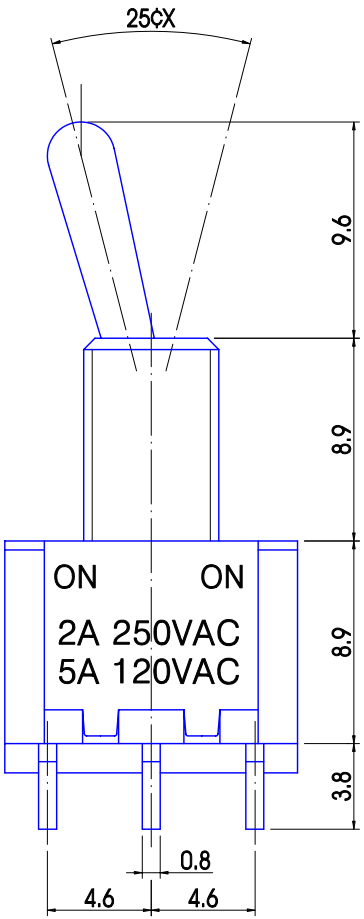

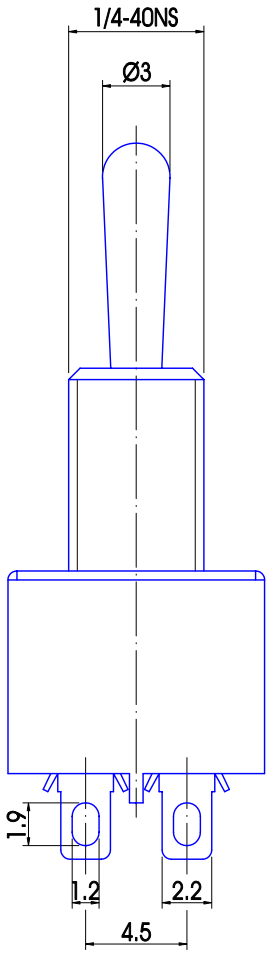

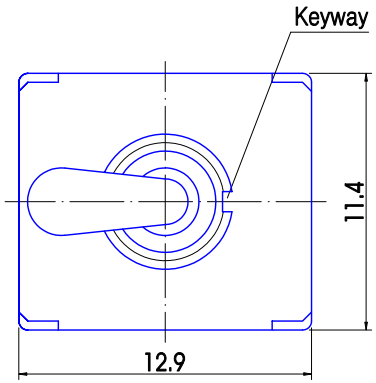

HOW TO ORDER

TOS02- ◯

Code	Switching Position
62	ON-ON
63	ON-OFF-ON

SPECIFICATION

Rating:	2A 250VAC or ,
	5A 120VAC or 28VDC
Contact Resistance:	10m ohm amx initial @ 2-4VDC
Insulation Resistance:	1,000M ohm min
Life:	10,000 cycles min.

DWN: Z.L.Y.			
CHKD: W. Y.	UNIT: mm	TITLE:	TOGGLE SWITCH
APVD: C.S.C.	SCALE:	PART NO.:	TOS02- ◯